CHRYSLER A-604

ELECTRONIC, FOUR-SPEED AUTOMATIC TRANSAXLE

Features and Benefits: An all-new, electronically-controlled, four-speed automatic transaxle is available with the 3.0 L V-6 engine in New Yorker, New Yorker Landau, Dynasty, Spirit ES, Acclaim LX, Caravan LE, all Grand Caravan models, Voyager LE, and all Grand Voyager models.

The customer will find this all-new transaxle to be very smooth and unobtrusive while providing reduced noise, improved highway fuel economy, faster and smoother response, and improved shift quality.

The transaxle provides faster acceleration in conjunction with a 3.43:1 final drive ratio, a ratio 6% to 23% higher than the ratio used with previous three-speed transmissions. When the transmission shifts to fourth gear, which is overdrive, the overall ratio drops to 2.36:1 to provide quieter operation. To provide good fuel economy in conjunction with the lower overall ratio, the torque converter locks in fourth gear, thereby eliminating slippage.

Shifts are very smooth due to fully adaptive electronic control which senses the speed changes between components within the gear train as shifts occur and adjusts hydraulic pressure as needed. This control method contrasts sharply with conventional automatic transmissions which shift by applying hydraulic pressure through orifices and mechanical accumulators based on a predetermined set of assumptions about engine output and friction material characteristics.

Chrysler Motors' use of **fully-adaptive electronic transmission controls** in its new four-speed automatic transaxle

A unique feature of electronic control is partial lock up of the torque converter which produces a smooth transition to full lock up. The speed differential between the input and output shafts of the transmission prior to lock up is typically 250 rpm. Partial lock up brings that differential into the range of 50-100 rpm, then completes the lock up. Adaptive control can do this because it can sense the speed differential and apply just enough pressure to the lock-up clutch to achieve the small slippage. After partial lock-up is achieved, pressure is increased incrementally until full lock-up is complete.

The electronic adaptive controls provide kick-down shifts with a smoothness that is unmatched by any previous unit, and in so doing, make the powertrain feel more responsive without increasing harshness. Being adaptive, these controls inherently compensate for changes in engine or friction element torque and provide good, consistent shift quality for the life of the transmission.

ELEMENTS IN USE AT EACH POSITION OF THE SELECTOR LEVER

Shift Lever Position	Start Safety	Park Sprag	CLUTCHES				
			Underdrive	Overdrive	Reverse	2/4	Low/ Reverse
P — PARK	X	X					X
R — REVERSE					X		X
N — NEUTRAL	X						X
OD — OVERDRIVE First			X				X
Second			X			X	
Direct			X	X			
Overdrive				X		X	
D — DRIVE* First			X				X
Second			X			X	
Direct			X	X			
L — LOW* First			X				X
Second			X			X	
Direct			X	X			

*Vehicle upshift and downshift speeds are increased when in these selector positions.

tect any unit which slips and to confirm proper operation of good units. However, although road test analysis can usually diagnose slipping units, the actual cause of the malfunction usually cannot be decided. Practically any condition can be caused by leaking hydraulic circuits or sticking valves.

SHIFT QUALITY QUICK-LEARN PROCEDURE

This procedure will quickly optimize shift quality after battery disconnect.

The transaxle operating temperature must be warm before learning is allowed. To warm up transaxle fluid, observe the following chart:

AMBIENT TEMP. (°F)	ENGINE IDLE TIME (MINUTES)
0	8
20	6
40	4
60	2
80	0

Upshift Learn Procedure

(1) Maintain constant throttle opening during shifts.

CAUTION: Do not move accelerator pedal during the upshifts.

(2) Accelerate vehicle with throttle opening angle in range of 10 to 50 degrees

(3) Make 15 to 20 1-2, 2-3, and 3-4 upshifts. **Accelerating from stop to approximately 45 mph each time at moderate throttle angle (20-25°) is sufficient.**

Kickdown Learn Procedure

(1) With vehicle speed below 25 mph, make 5 to 8 wide-open-throttle kickdowns to 1st gear from either 2nd or 3rd gear. Allow for 5 seconds or more of operation in 2nd or 3rd prior to the kickdown.

(2) With vehicle speed greater than 25 mph, make 5 to 8 part throttle to wide-open throttle kickdowns to either 3rd or 2nd gear from 4th gear (for example, 4-3 or 4-2 kickdowns). Allow for 5 seconds or more of operation in 4th, preferably at road-load throttle, prior to performing the kickdown.

HYDRAULIC PRESSURE TESTS

Pressure testing is a very important step in the diagnostic procedure. These tests usually reveal the cause of most transaxle problems.

Before performing pressure tests, be certain that fluid level and condition, and shift cable adjustments have been checked and approved. Fluid must be at operating temperature (150 to 200 degrees F.).

Install an engine tachometer, raise vehicle on hoist which allows front wheels to turn, and position tachometer so it can be read.

Attach 150 psi gauges to ports required for test being conducted. A 300 psi gauge (C-3293) is required for reverse pressure test.

Test port locations are shown in (Figure 1).

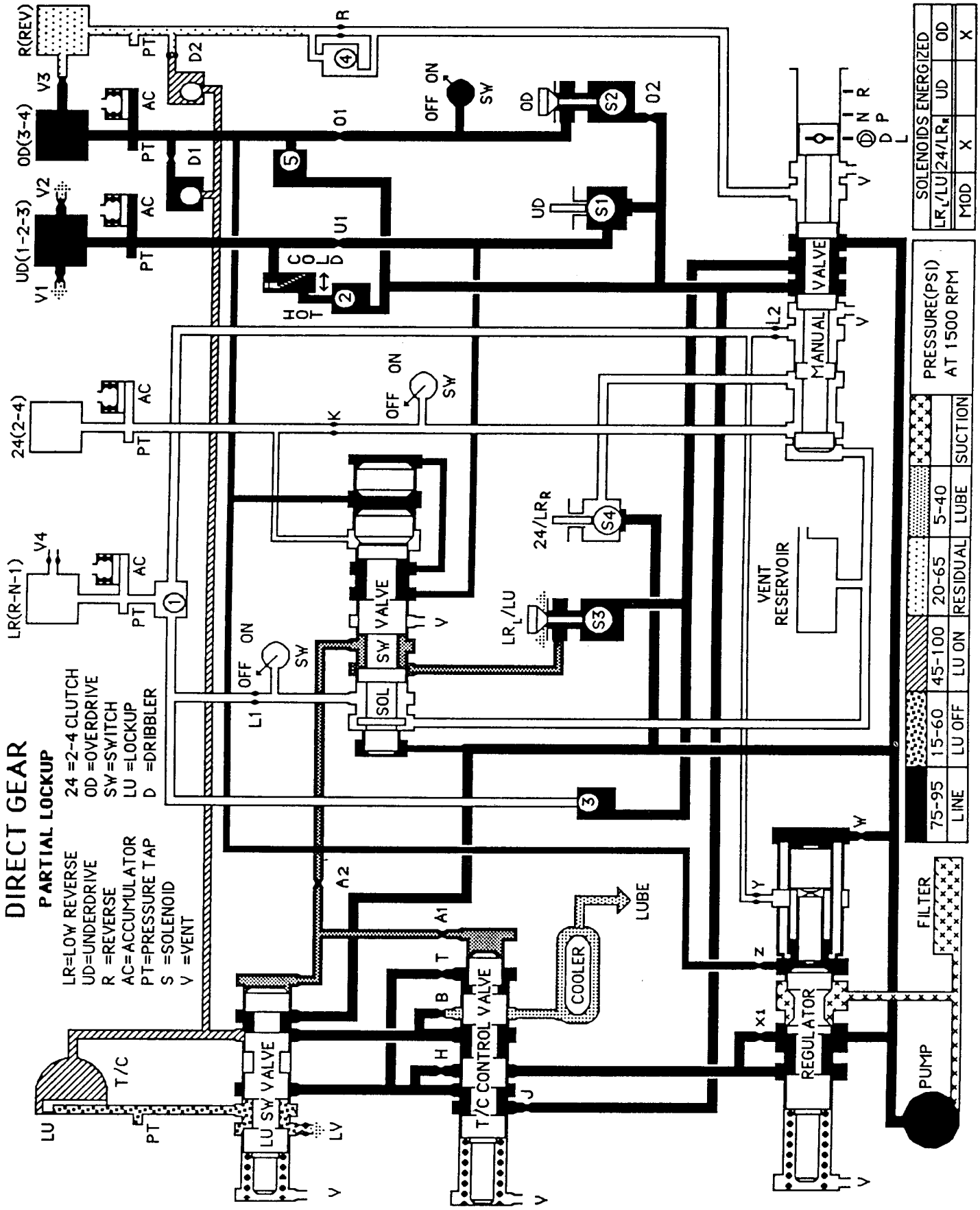
DIRECT GEAR
PARTIAL LOCKUP
LR=LOW REVERSE
UD=UNDERDRIVE
R =REVERSE
AC=ACCUMULATOR
PT=PRESSURE TAP
S =SOLENOID
V =VENT
24 =2-4 CLUTCH
OD =OVERDRIVE
SW=SWITCH
LU =LOCKUP
D =DRIBBLER
R(REV)
OD(3-4)
UD(1-2-3)
24(2-4)
LR(R-N-1)
V1
V2
V3
V4
PT
AC
D1
D2
O1
O2
U1
OFF ON
SW
OD
UD
S1
S2
S3
S4
COLD
HOT
MANUAL VALVE
L1
L2
K
24/LR_R
LR_L/LU
SOL SW VALVE
VENT RESERVOIR
A1
A2
T
B
H
J
T/C CONTROL VALVE
COOLER
LUBE
LU SW VALVE
LU
LV
T/C
REGULATOR
X1
Y
Z
W
FILTER
PUMP
SOLENOIDS ENERGIZED
LR_L/LU
24/LR_R
UD
OD
MOD
X
X
PRESSURE(PSI) AT 1500 RPM
75-95
LINE
15-60
LU OFF
45-100
LU ON
20-65
RESIDUAL
5-40
LUBE
SUCTION

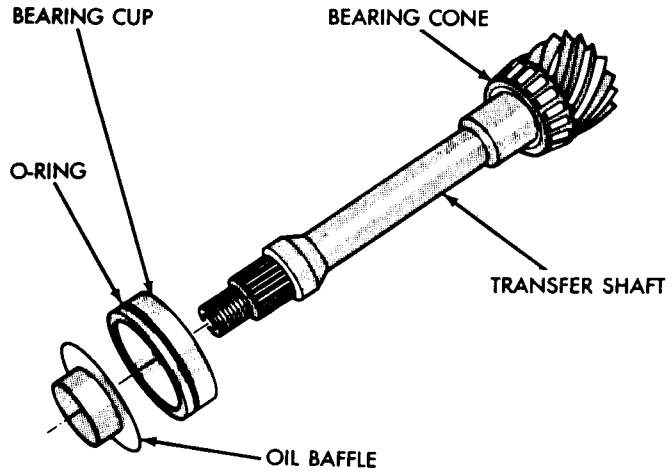

Fig. 42—Bearing Cup Removed

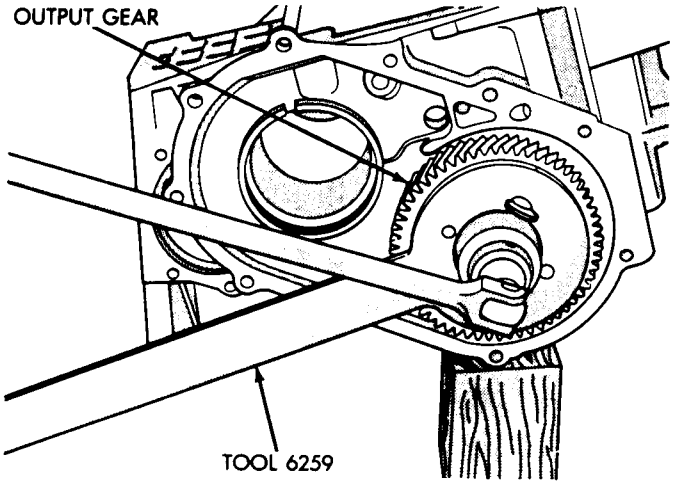

Fig. 43—Remove Output Gear Bolt

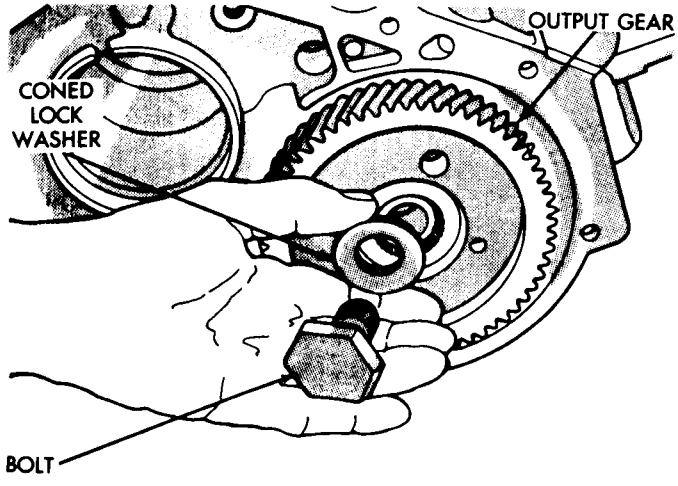

Fig. 44—Output Gear Bolt and Washer

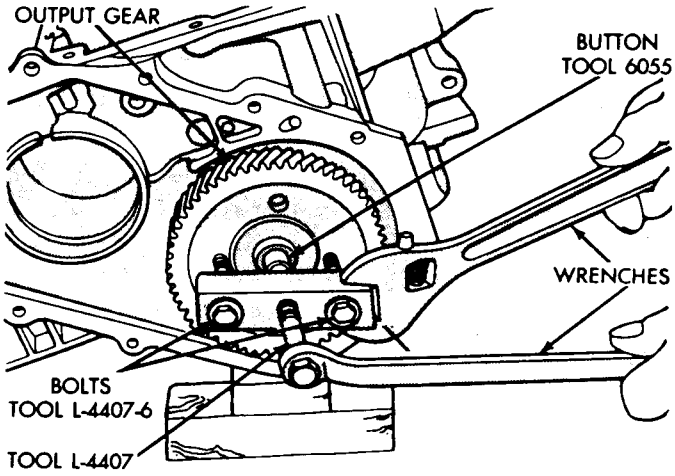

Fig. 45—Remove Output Gear

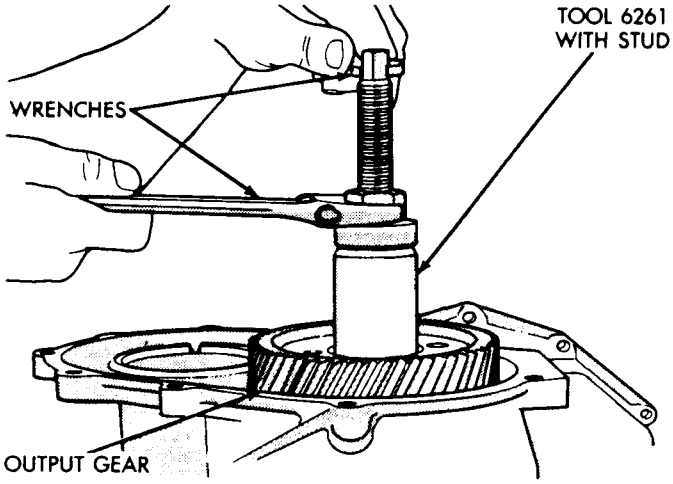

Fig. 46—Install Output Gear

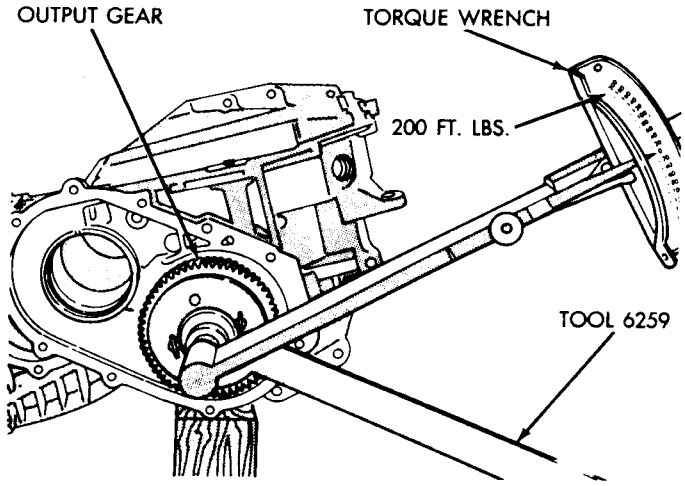

Tighten Output Gear to 271 N·m (200 Ft. Lbs.)

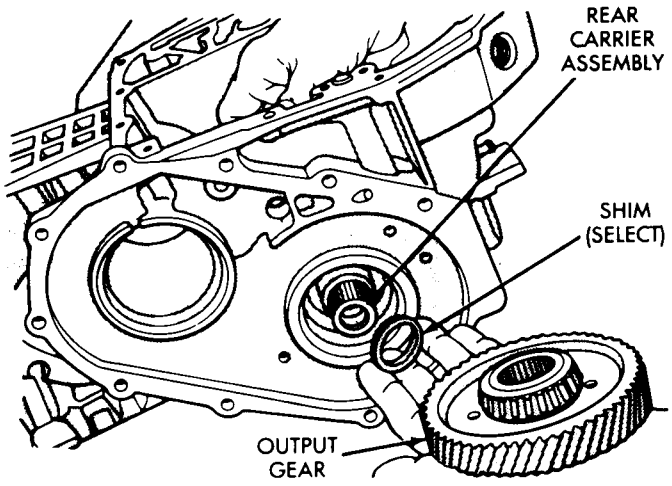

Fig. 47—Output Gear and (Select) Shim

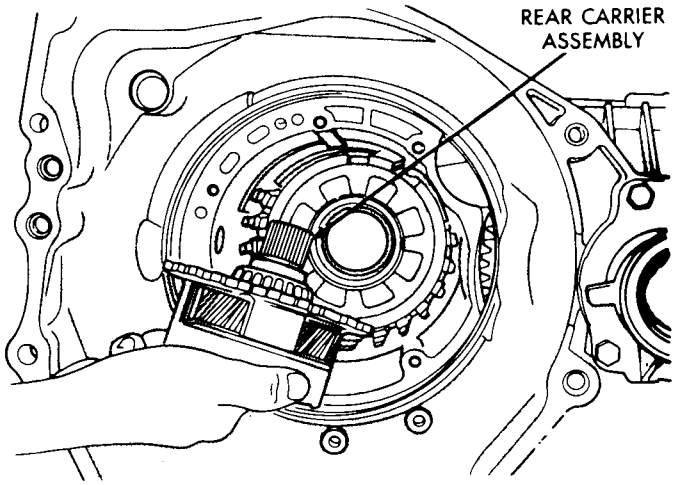

Fig. 50—Rear Carrier Assembly

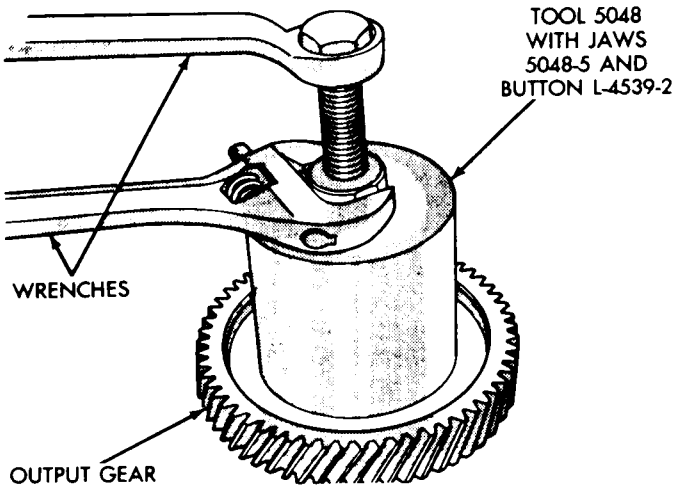

Fig. 48—Remove Bearing Cone

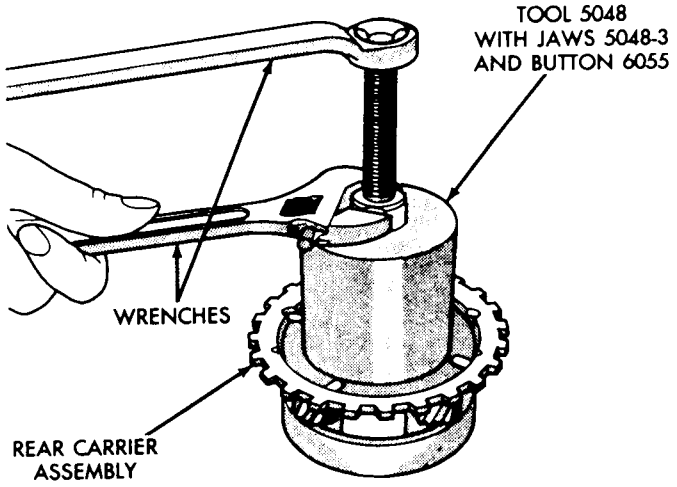

Fig. 51—Remove Rear Carrier Bearing Cone

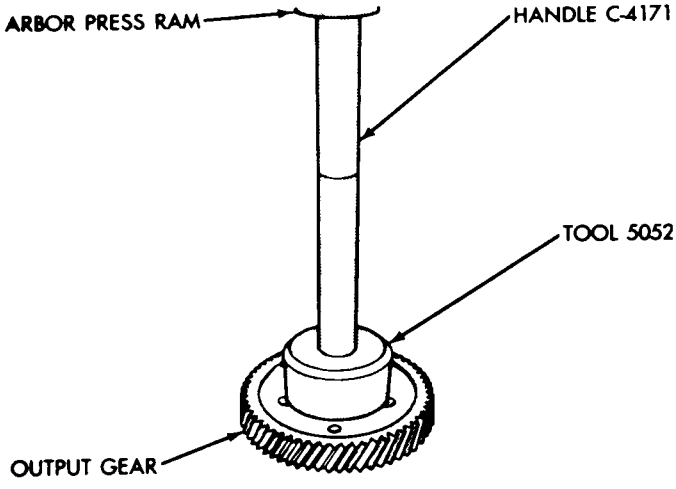

Fig. 49—Install New Bearing Cone

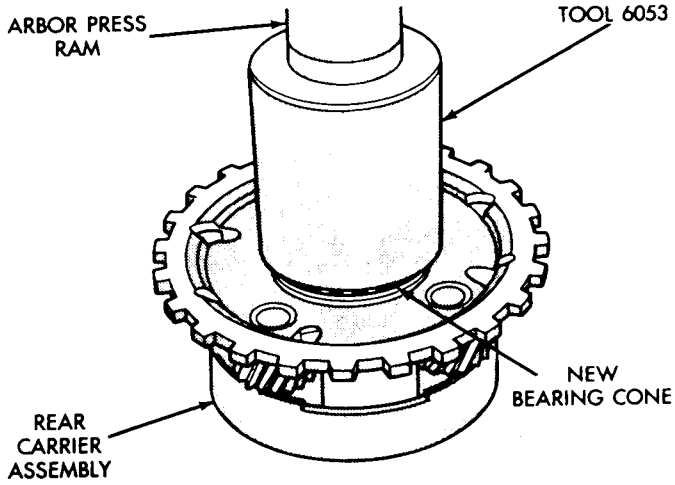

Fig. 52—Install Rear Carrier Bearing Cone